Fig. 143 (Rev. 03/03)
(New 02/60)

PIPE, CAST IRON OR DUCTILE, LESS THAN 24 IN. I.D., 12 FT LONG OR OVER (NOT EXCEEDING TWO LAYERS ABOVE TOP OF CAR SIDES)—GONDOLAS

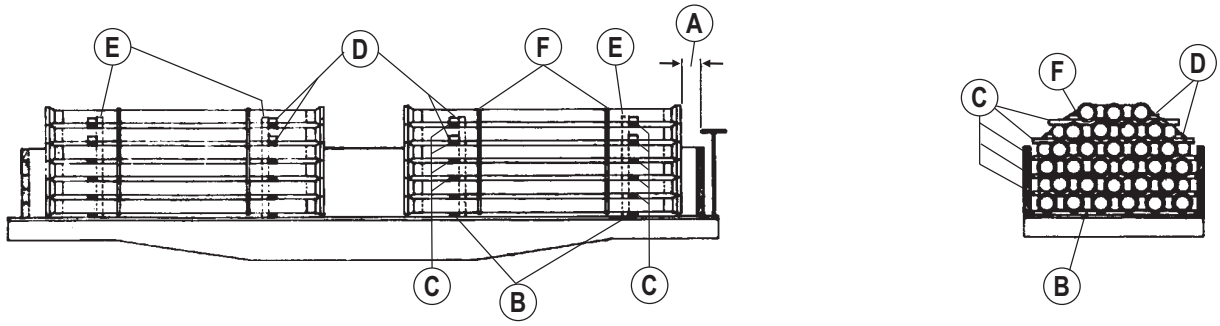

Item	No. of Pcs.	Description
A		Brake wheel clearance: see General Rule 2 in Section 1.
B	2 per pile.	Bearing pieces: hardwood, 3 in. wide, high enough to keep flange or bell from coming in contact with floor, rivet heads, etc., length 2 in. less than width of car, height not to exceed width. Locate about one-fifth the distance from each end of pile.
C	2	Separators: hardwood, 3 in. × 4 in., between successive layers. Locate directly above Items B.
D	2 each Items B and C.	Chocks: hardwood, 4 in. × 6 in., wedge-shaped, nailed to Items B and C with five 16-D nails in each, three in tapered face and two in outside face. Not required below top of car side when pipe completely spans full width of car.
E	2 per pile.	Binders: hardwood, 3 in. × 3 in., long enough to extend from floor to 6 in. above center line of top layer of pipe, secured to Items C. Use optional.
F	2 per pile.	Encircling bands: 2 in. × .044 in., high tension. Locate about 12 in. from Items C, encircling pile at each end.

Notes and Additional Requirements:

1. Pipe less than 12 ft long must be loaded below top of car sides.
2. Length of car permitting bell ends of pipe should be about 16 in. in from plain ends of pipe, and ends of pile about 18 in. from ends of car.
3. If desired, suitable cushioning material may be applied between piles and between piles and ends of car.

Reference the General Rules in Section No. 1 of the *Open Top Loading Rules Manual* for additional details.

Fig. 147-A (Rev. 10/15)
(New 11/74)

PIPE, CAST IRON OR DUCTILE, 3 IN. TO 54 IN. I.D.—BULKHEAD FLATCARS, WITH CHAIN TIE-DOWNS OR BAND ANCHORS

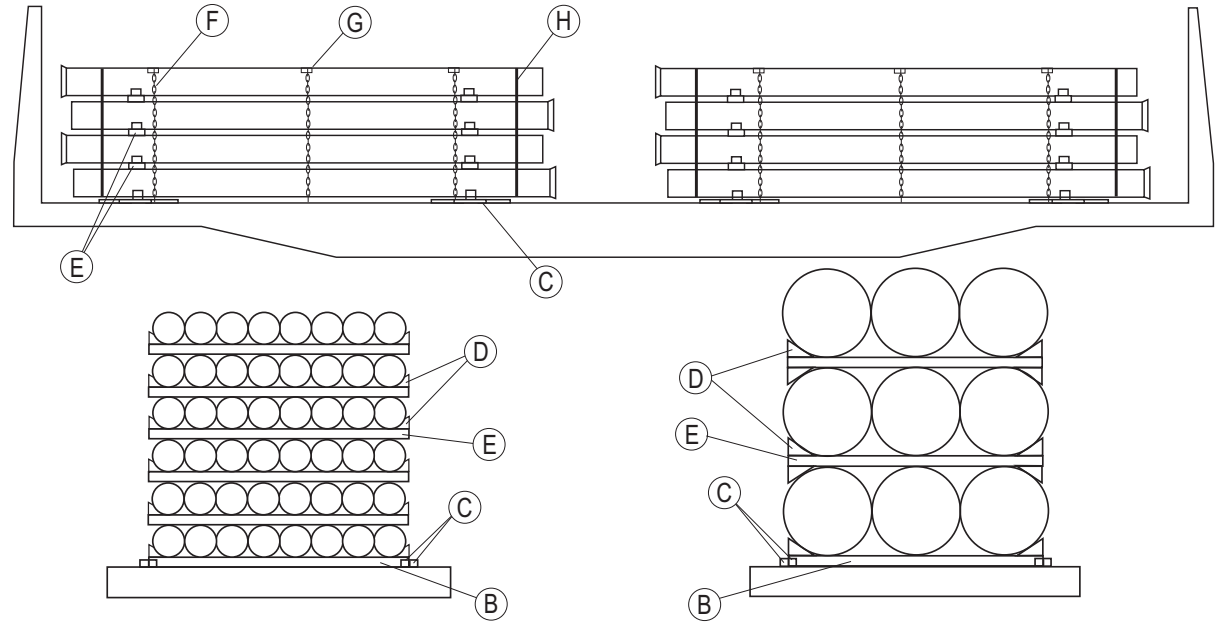

Pipe 3" to 12" **Pipe over 12"**

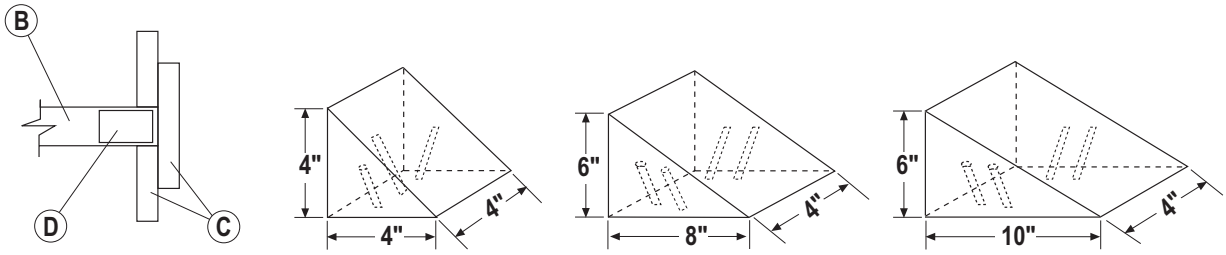

SKETCH 1

Predrill for three 16–D nails
SKETCH 2

Predrill for four 20–D nails
SKETCH 3

Predrill for four 20–D nails
SKETCH 4

Item	No. of Pcs.	Description
A		Vacant
B	2 each pile, 4 in. to 42 in., inclusive.	Bearing pieces: hardwood, minimum 4 in. × 4 in., height not to exceed width, length about equal to width of car and sufficient to apply Items D.
	2 each pile over 42 in. to 54 in., inclusive.	Bearing pieces: hardwood, minimum 5 in. × 5 in., height not to exceed width, length about equal to width of car and sufficient to apply Items D.
C	6 per each Item B.	Bearing piece retainers: lumber, 2 in. × 4 in. × 18 in., placed longitudinally at each end of bearing piece and secured with three 20-D nails each to car floor. See Sketch 1.

IMPLEMENTED 10/2015

Fig. 147-A (Rev. 10/15) (Concluded)
(New 11/74)

PIPE, CAST IRON OR DUCTILE, 3 IN. TO 54 IN. I.D.—BULKHEAD FLATCARS, WITH CHAIN TIE-DOWNS OR BAND ANCHORS

Item	No. of Pcs.	Description
D	2 each Item B and E, pipe 4-in. to and including 12-in. I.D. 2 each Item B, 4 each Item E, pipe over 12-in. to and including 18-in. I.D.	Chock blocks: hardwood, 4 in. × 4in. × 4 in., per Sketch 2. Locate against pipe and secure each to top of Item B and to the top and bottom of Item E with three 16-D nails
	2 each Item B, 4 each Item E, pipe over 18-in. to and including 36-in. I.D.	Chock blocks: hardwood, 4 in. × 6 in. × 8 in., per Sketch 3. Locate against pipe and secure each to top of Items B and to the top and bottom of Item E with six 20-D nails.
	2 each Item B, 4 each Item E, pipe over 36-in. I.D.	Chock blocks: hardwood, 4 in. × 6 in. × 10 in., per Sketch 4. Locate against pipe and secure each to top of Items B and to the top and bottom of Item E with six 20-D nails.
E	2 each layer, 3-in. to 24-in. I.D., inclusive.	Separators: hardwood, minimum 3 in. × 4 in., height not to exceed width, length about equal to width of load and sufficient to apply Items D.
	2 each layer over 24-in. to 42-in. I.D., inclusive.	Separators: hardwood, minimum 4 in. × 4 in., height not to exceed width, length about equal to width of load and sufficient to apply Items D.
	2 each layer over 42-in. to 54-in. I.D., inclusive.	Separators: hardwood, minimum 5 in. × 5 in., height not to exceed width, length about equal to width of load and sufficient to apply Items D.
F	Minimum 3 per pile.	Chains: must be tight and free of kinks and tangles. If practical, all chains on car must be used.
G	2 per each Item F.	Protective material: use optional.
H	2 each pile.	Encircling bands: 1 1/4 in. × .044 in. high tension. Locate minimum of 18 in. from Items B, encircling pile at each end. Tension and seal after chains, Item F, have been tightened.
J	2 per package.	Package bands: 1 1/4 in. × .029 in. high tension. Locate to encircle each end of each package. Use optional (not shown on drawing).
ALTERNATE		
F	3 each pile.	Tie-down bands: 2 in. × .044 in. high tension. Single retaining bands to be attached at stake pocket or anchor lading devices on opposite sides of car, then tension and seal each pair of bands at top of load with two seals double crimped or notched. Optional attachment method: Apply over pile and secure to opposite stake pockets or anchor lading devices.
H	2 each pile.	Encircling bands: 2 in. × .044 in. high tension. Locate minimum of 18 in. from Items B, encircling pile at each end. Tension and seal after Items F have been applied.

Notes and Additional Requirements:

1. At origin, there must be a minimum of 18 in. void space between piles.
2. Tie-down chains and tensioning devices must have a 5,000 lb working load limit.
3. Predrilling for blocks, Sketches 2, 3, and 4 not required when power-driven nails are used for block securement.
4. Sweet gum is an acceptable substitute for hardwood in this figure.

Reference the General Rules in Section No. 1 of the *Open Top Loading Rules Manual* for additional details.

IMPLEMENTED 10/2015

Fig. 147-B (Rev. 02/09)
(New 09/95)

(Archived 06/2013)

PIPE, CAST IRON OR DUCTILE, 3 IN. TO 64 IN. I.D.—FLATCARS, WITH CUSHIONING DEVICES, FIXED WOOD BEARING PIECES, AND AUXILARY BAND ANCHORS

IMPLEMENTED 10/2015

Fig. 147-C (Rev. 10/15)
(New 03/01)

PIPE, CAST IRON OR DUCTILE, 30 IN. TO 36 IN. I.D., 18 FT TO 21 FT LONG—BULKHEAD FLATCARS, WITH CUSHIONING DEVICES

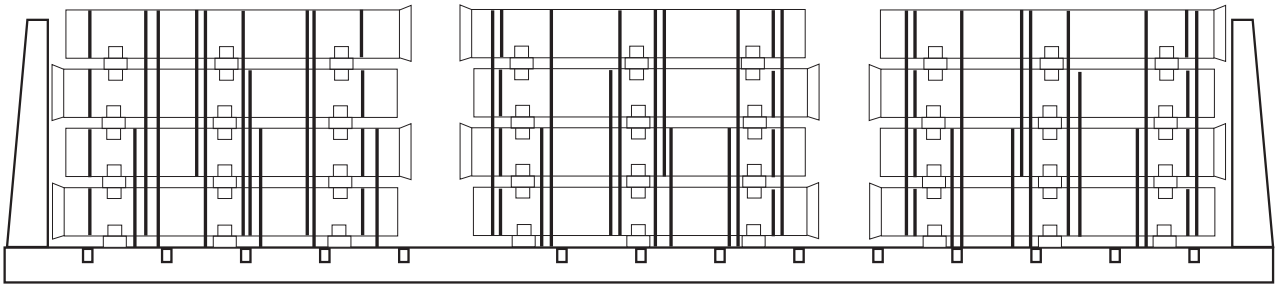

SKETCH 1

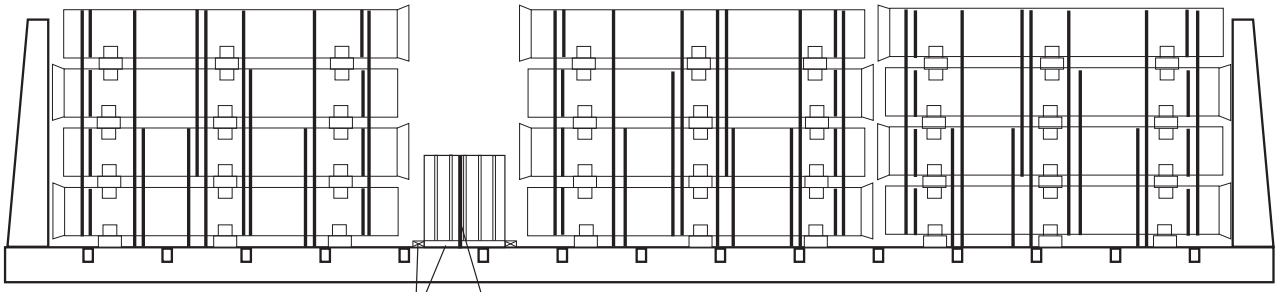

SKETCH 2

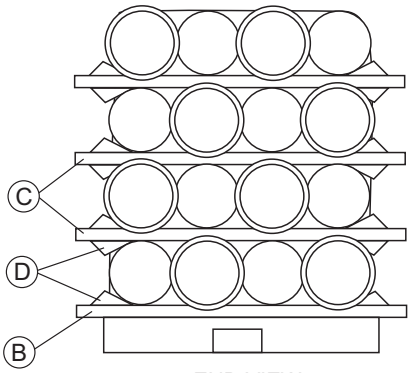

END VIEW

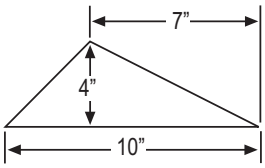

4” x 6” 10” Recommended
Item “D” Chock Design

DETAIL B

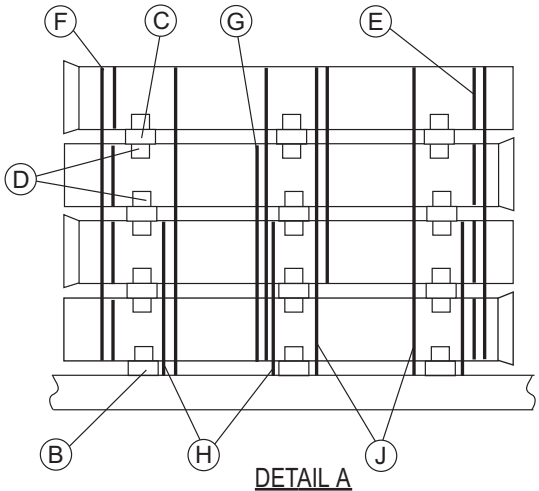

DETAIL A

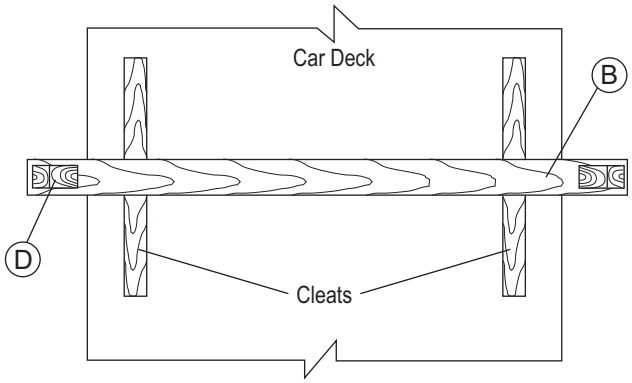

TOP VIEW OF BEARING PIECE APPLICATION
DETAIL C

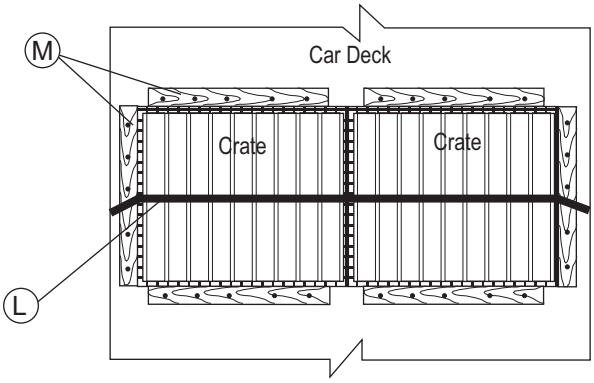

TOP VIEW OF CRATE SECUREMENT
DETAIL D

Fig. 147-C (Rev. 10/15) (Continued)
(New 03/01)

PIPE, CAST IRON OR DUCTILE, 30 IN. TO 36 IN. I.D., 18 FT TO 21 FT LONG—BULKHEAD FLATCARS, WITH CUSHIONING DEVICES

Item	No. of Pcs.	Description
A		Vacant
B	3 per pile.	Bearing pieces: hardwood 4 in. × 6 in. in one piece and preferably rough. Length to extend a sufficient distance beyond side of load to allow full support and application of Item D chock blocks. Secure using one of the following methods. Secure each to the car floor with a minimum of two 3/4-in. bolts spaced at least 6 ft apart; or, secure each using four 2 in. × 4 in. × 18 in. hardwood cleats, two on each side as depicted in Detail C. Locate cleats approximately 6 in. to 18 in. from the edge of the car floor. Toenail each cleat into the bearing piece with a minimum of two 16-D nails, three when power driven. Secure each cleat to the car floor with five common nails, evenly distributed, length to be at least 2 in. longer than thickness of the cleat. (If car is equipped with permanent bearing pieces, refer to Note 4 below.)
C	3 per layer, each pile.	Separators: hardwood, 4 in. × 6 in., one piece, and preferably rough. Length to extend a sufficient distance beyond side of load to allow application of Item D chock blocks. Locate in line with Items B where possible.
D	2 each Item B. 4 each Item C.	Chock blocks: hardwood, 4 in. × 6 in. × 10 in. See Detail B. Locate against pipe and secure each to Items B and C with six 16-D nails. Chocks must be solid and without cracks or fissures that may weaken or otherwise reduce their ability to restrain the pipe.
E	2 per layer.	Layer encircling bands: 2 in. × .044 in. high tension bands. Encircle all side-by-side pipe in the same layer. Locate approximately 18 in. to 24 in. from ends of layer.
F	3 per pile.	Encircling bands: 2 in. × .044 in. high tension bands. Locate under bottom layer encircling entire pile. Locate end bands approximately 18 in. from ends of pile with third band equally spaced between.
G	2 per pile.	Unitizing bands: 2 in. × .044 in. high tension bands. One band must be applied around bottom three layers of pipe. One band must be applied around top three layers of pile. Bands to be located approximately in center of pile.
H	3 per pile.	Bottom securement bands: 2 in. × .044 in. high tension bands. Locate over bottom two layers of pile and secure to anchor devices or stake pockets on each side of car. Distribute bands equally over length of pile.
J	3 per pile.	Securement bands: 2 in. × .044 in. high tension bands. Locate over top of pile and secure to anchor devices or stake pockets on each side of car. Distribute bands more or less equally over length of pile.
K	2 per each Items H and J.	Band protection: 2 in. × .044 in. high tension bands. Locate one piece approximately 12 in. long between each anchor device, or stake pocket, and Items H and J securement bands for protection. (Not shown on drawing.)
CRATED CARGO, LOOSE PARTS, AND FITTINGS		
L	1 per crate.	Crate tie-down band: 2 in. × .044 in. high tension bands. Locate over top of crate and secure to anchor devices or stake pockets on each side of car.
M	As required.	Crate blocking: lumber, minimum 2 in. × 4 in. in one piece, length equal to width of crate. Locate against and on all four sides of the crate. Secure each to the car floor with a minimum of six 16-D nails spaced 3 in. from each end with the rest equally spaced between.

Notes and Additional Requirements:

1. At origin, end piles must be loaded against end bulkheads with middle pile centered between. There must be a minimum of 18 in. of void space between piles.
2. All lateral void space must be eliminated in pipe layers.
3. Position all bands to avoid fouling adjacent bands as well as Items B and C.
4. If car is equipped with permanent bearing pieces, Item B must be hardwood, 2 in. × 6 in., in one piece, and preferably rough. Length to extend a sufficient distance beyond side of load to allow full support and application of Item D chock blocks. Secure each to the permanent bearing pieces with eight 40-D nails, equally spaced. When extended beyond permanent bearing piece, or is otherwise unsupported directly by the car floor, Item B must be increased to 4 in. × 6 in. when Item D is applied to this extended area.

IMPLEMENTED 10/2015

Fig. 147-C (Rev. 10/15) (Concluded)
(New 03/01)

PIPE, CAST IRON OR DUCTILE, 30 IN. TO 36 IN. I.D., 18 FT TO 21 FT LONG—BULKHEAD FLATCARS, WITH CUSHIONING DEVICES

Notes and Additional Requirements:

5. Item D chock blocks must be predrilled to prevent splitting, unless power-driven nails are used.
6. Item B bearing pieces and Item C separators must be trimmed to reduce excess so as not to interfere with load securement bands during any movement of load.
7. Centerline of pipe must not extend beyond the inside edge of the car side sill.
8. If equipped with bell or flared ends, pipe must be alternated to avoid contact and the load equalized as shown.
9. Crates, if used, must comply with Rule 5.7.2 in Section 1.
10. No more than two crates may be loaded per car and they must be positioned between pipe piles. Two crates are to be positioned side-by-side across the width of the car and placed without void. When two crates are loaded, Item M must extend to protect both crates in each direction.
11. Sweet gum is an acceptable substitute for hardwood in this figure.

Reference the General Rules in Section No. 1 of the Open Top Loading Rules Manual for additional details.

IMPLEMENTED 10/2015

Fig. 147-D (Rev. 10/15)
(New 10/10)

PIPE, DUCTILE, 3 IN. TO 64 IN. I.D.— FLATCARS, FIXED WOOD BEARING PIECES AND LADING ANCHORS

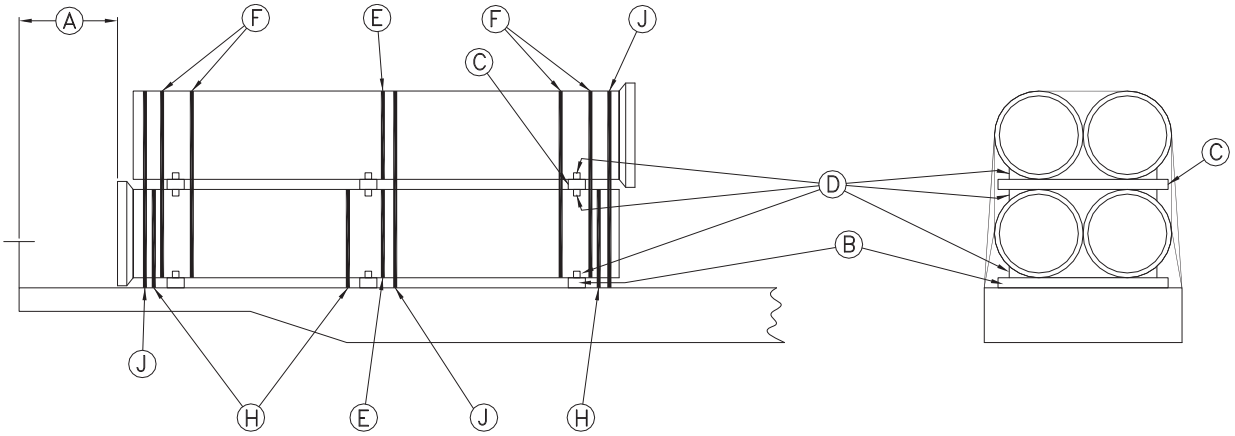

60 IN. I.D.

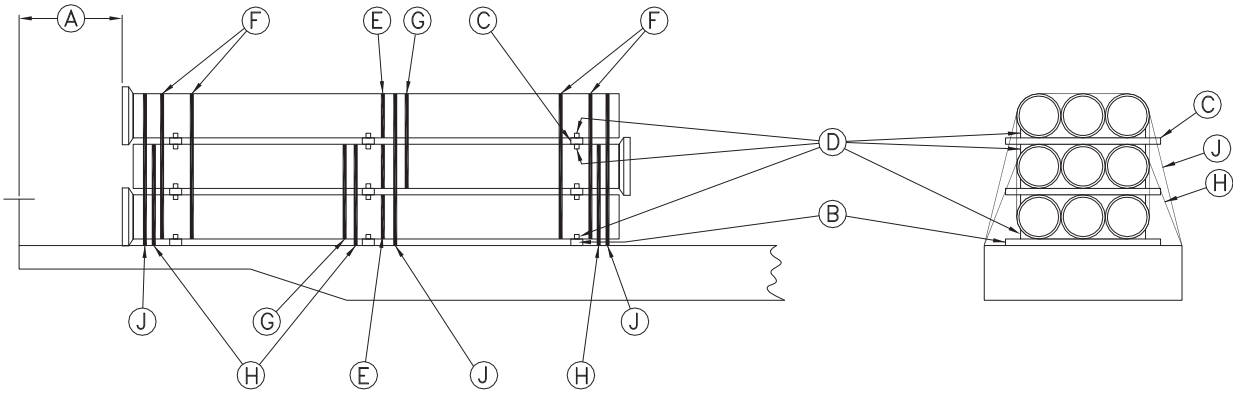

30 IN. I.D.

IMPLEMENTED 10/2015

Fig. 147-D (Rev. 10/15) (Continued)
(New 10/10)

PIPE, DUCTILE, 3 IN. TO 64 IN. I.D.— FLATCARS, FIXED WOOD BEARING PIECES AND LADING ANCHORS

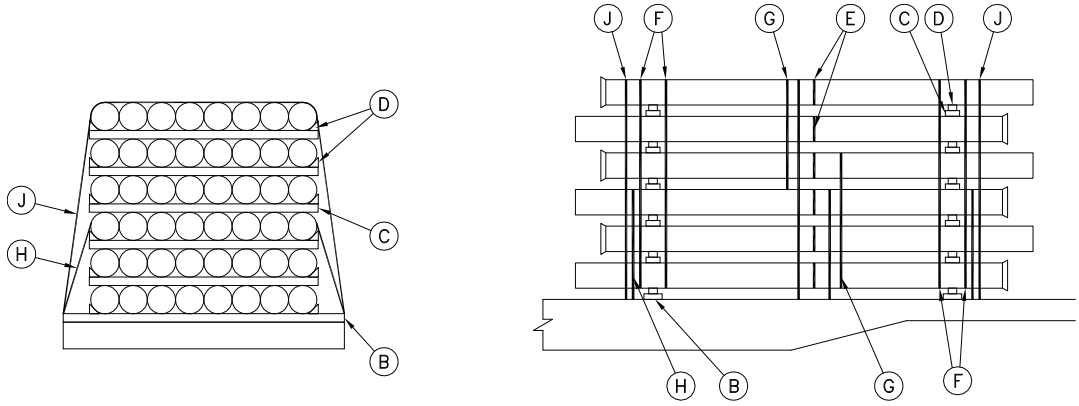

12 IN. I.D.

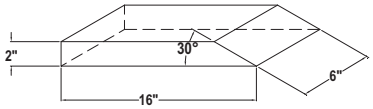

SKETCH 1

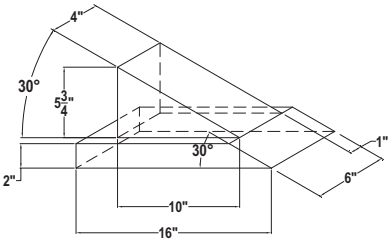

SKETCH 2

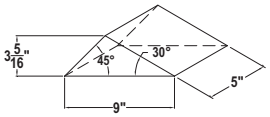

SKETCH 3

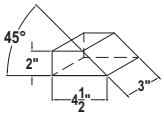

SKETCH 4

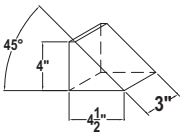

SKETCH 5

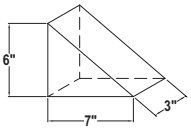

SKETCH 6

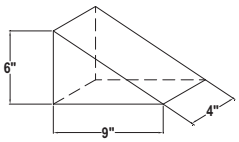

SKETCH 7

IMPLEMENTED 10/2015

Fig. 147-D (Rev. 10/15) (Continued)
(New 10/10)

PIPE, DUCTILE, 3 IN. TO 64 IN. I.D.— FLATCARS, FIXED WOOD BEARING PIECES AND LADING ANCHORS

Item	No. of Pcs.	Description
A		Load must be evenly positioned on car at origin, but must be no closer than 2 ft from either end of the car when loaded on flatcars. If load is wider than car sides, then closest pipe to ladder must be positioned no closer than 2 ft from the ladder.
B	2 per pile 3-in. to and including 30-in. I.D. inclusive, 3 per pile over 30-in. I.D.	Bearing pieces: because cars are equipped with permanent bearing pieces, no additional bearing piece dunnage is required. If shipper elects to apply additional bearing piece dunnage on top of permanent bearing pieces, these pieces are to be of hardwood, minimum 2 in. × 6 in., in one piece and preferably rough. Length to extend a sufficient distance beyond side of load to allow full support and application of Item D chock blocks. Position these boards on fixed bearing pieces after any old nails are removed. Secure each to the permanent bearing pieces with eight 40-D nails, equally spaced. Portion of 2 in. × 6 in. extended beyond permanent bearing piece must be supported or Item B must be increased to 4 in. × 6 in. when Item D is applied to this extended area.
C	2 each layer, 3-in. to 24-in. I.D., inclusive.	Separators: hardwood, minimum 3 in. × 4 in., length to extend 2 in. beyond side face (barrel) of load on each side. Locate in line with Items B where possible. **Note:** On ductile pipe with a weld bead on the end, separators are to be 4 in. × 4 in. hardwood. All other provisions of this Item apply.
	2 each layer over 24-in. to 30-in. I.D., inclusive.	Separators: hardwood, minimum 4 in. × 4 in., height not to exceed width, length to extend 2 in. beyond side face (barrel) of load on each side. Locate in line with Items B where possible.
	3 each layer over 30-in. I.D. to 42 in. I. D.	Separators: hardwood, minimum 4 in. × 4 in., height not to exceed width, length to extend 2 in. beyond side face (barrel) of load on each side. Locate in line with Items B where possible
	3 each layer over 42 in. I. D.	Separators: hardwood, minimum 5 in. × 5 in., height not to exceed width. Locate in line with Items B where possible.
D		Chock blocks: see below
D_{b1}	2 each Item B pipe 3-in. to and including 12-in. I.D.	Chock blocks: hardwood, 2 in. × 6 in. × 16 in., per Sketch 1. Locate on top of Item B and against the pipe. Secure each chock with three 16-D nails.
D_{b2}	2 each Item B pipe over 12-in. I.D.	Chock blocks: hardwood, 5 3/4 in. × 4 in. × 10 in. angled block per Sketch 2, nailed to a hardwood board, 2 in. × 6 in. × 16 in. from the bottom with four 20-D nails. Assembly nailed to Item B with six 16-D nails. **Note:** Certain bundles with pipe sizes of 20 in., 24 in., and 30 in. I.D. do not allow for sufficient nailing surface to secure the chock assembly. In those situations, the chock assembly may be substituted with 3 3/16 in. × 5 in. × 9 in. chock blocks per Sketch 3. Locate on top of Item B and against the pipe. Secure each chock with four 16-D nails.
D_c	2 each Item C, pipe 3-in. to and including 12-in. I.D.	Chock blocks: hardwood, 2 in. × 3 in. × 4 1/2 in., per Sketch 4. Locate on top of Item C and against the pipe. Secure each chock with three 16-D nails.
	4 each Item C, pipe over 12-in. to and including 16-in. I.D.	Chock blocks: hardwood, 4 in. × 3 in. × 4 1/2 in., per Sketch 5. Locate against pipe and secure each to top and bottom of Item C with four 20-D nails.
	4 each Item C, pipe over 16-in. to and including 24-in. I.D.	Chock blocks: hardwood, 6 in. × 3 in. × 7 in., per Sketch 6. Locate against pipe and secure each to top and bottom of Item C with four 20-D nails.
	4 each Item C, pipe over 24 -in. I.D. and greater.	Chock blocks: hardwood, 4 in. × 6 in. × 9 in., per Sketch 7. Locate against pipe and secure each to top and bottom of Item C with four 20-D nails.
E	1 per layer.	Layer encircling bands: approved non-metallic woven polyester cord strap as permitted in Section 1, Rule 19, Table 19.3. Encircle all side-by-side pipe in a layer. Locate approximately in center of pile. (Use optional.)

IMPLEMENTED 10/2015

Fig. 147-D (Rev. 10/15) (Concluded)
(New 10/10)

PIPE, DUCTILE, 3 IN. TO 64 IN. I.D.— FLATCARS, FIXED WOOD BEARING PIECES AND LADING ANCHORS

Item	No. of Pcs.	Description
F	4 per pile.	Encircling bands: approved non-metallic woven polyester cord strap as permitted in Section 1, Rule 19, Table 19.3. Locate under bottom layer encircling entire pile. Locate end straps within 24 in. of separators. Add two additional straps and locate within 24 in. inside of separators.
G	2 per pile.	Unitizing bands: approved non-metallic woven polyester cord strap as permitted in Section 1, Rule 19, Table 19.3. One strap must be applied around all bottom layers of pipe and encompass one layer in the top 50% of load. One strap must be applied around all top layers of pile and encompass one layer in the bottom 50% of load. Straps to be located approximately in center of pile. (Use optional.)
H	3 per pile.	Bottom securement bands: approved non-metallic woven polyester cord strap as permitted in Section 1, Rule 19, Table 19.3. Locate over bottom one half to two thirds of pile and secure to J hooks or use manufacturer's combination strap with buckles to lading anchors on each side of car.
J	3 per pile.	Securement bands: approved non-metallic woven polyester cord strap as permitted in Section 1, Rule 19, Table 19.3. Locate over top of pile and secure to J hook buckle or use manufacturer's combination strap with buckles to lading anchors on each side of car.

Notes and Additional Requirements:

1. Item D chock blocks must be predrilled to prevent splitting, unless power-driven nails are used.
2. Trim all excess approved non-metallic woven polyester cord strap to 12 in. in length.
3. Sweet gum is an acceptable substitute for hardwood in this figure.

Reference General Rules 1, 2, 3, 4, 10, 11, 15, 17, 19, and 25 in Section No. 1 of the Open Top Loading Rules Manual for additional details.

IMPLEMENTED 10/2015

Fig. 148 (Rev. 09/94)
(New 02/60)

PIPE, CORRUGATED STEEL, GALVANIZED, 30 IN. O.D. OR LESS—GONDOLAS

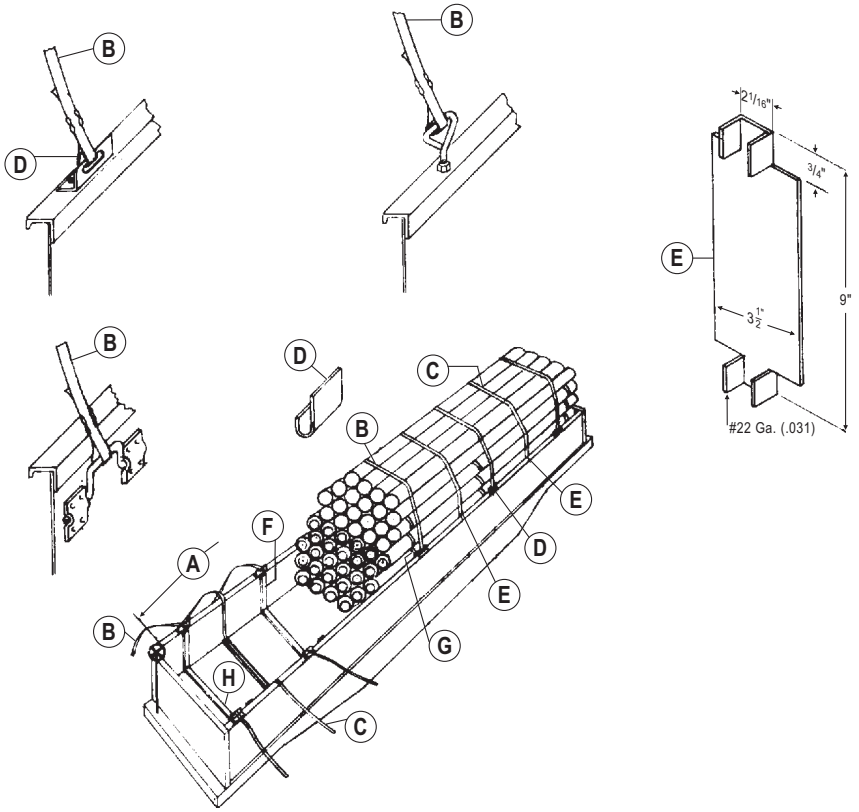

Item	No. of Pcs.	Description
A		Brake wheel clearance: see General Rule 2 in Section 1.
B	Pile 30 ft long or less, 2; pile over 30 ft long, 3.	High tension bands: 2 in. × .044 in., attached to stake pockets, anchor bolts, or slotted angle. Not required when load is not more than 2 ft above car sides.
C	Pile 30 ft long or less, 2; pile over 30 ft, 3.	High tension bands: 2 in. × .044 in., encircling entire pile, equally spaced. Add one additional band for each band specified when Items B are not used.
D	1 each stake pocket.	Metal filler: 4 in. wide, 1/2-in. radius, of suitable design and strong enough to maintain this radius.
E	2 each Items B and C.	Use when bands may contact metal at top of car sides.
F	4 each pile.	4 in. wide, thick enough to prevent pipe from contacting car sides, etc. Use optional.
G	3 each layer.	High tension bands: 3/4 in. × .029 in., encircling entire layer when outside pipe in layer is directly above or slightly overhanging pipe below.
H	3 per pile.	4 in. wide, thick enough to prevent pipe contacting floor, rivet heads, etc., length equal to width of load.

Notes and Additional Requirements:

1. Place all bands in corrugations of pipe.
2. Pipe less than 10 ft long must be loaded below top of car sides. Small-diameter pipe may be loaded inside larger-diameter pipe.
3. Where small-diameter spiral corrugated pipe is loaded inside larger-diameter pipe above top of car sides, the inner and outer pipe must be wired together to prevent shifting.
4. Coated or treated pipe may be separated by wood, excelsior, or similar material, when necessary.

Reference the General Rules in Section No. 1 of the *Open Top Loading Rules Manual* for additional details.